Hopup Lite

HOP-LITE-3X3-S
HOP-LITE-4X3-S

Hopup Lite™ tension fabric displays are simple, versatile and can be set up in seconds. Hopup Lite feature a lightweight, durable frame that holds a straight fabric mural. Simply attach the graphic to a expanded frame and you have an exhibit. All Hopup Lite graphics are available with and without end caps.

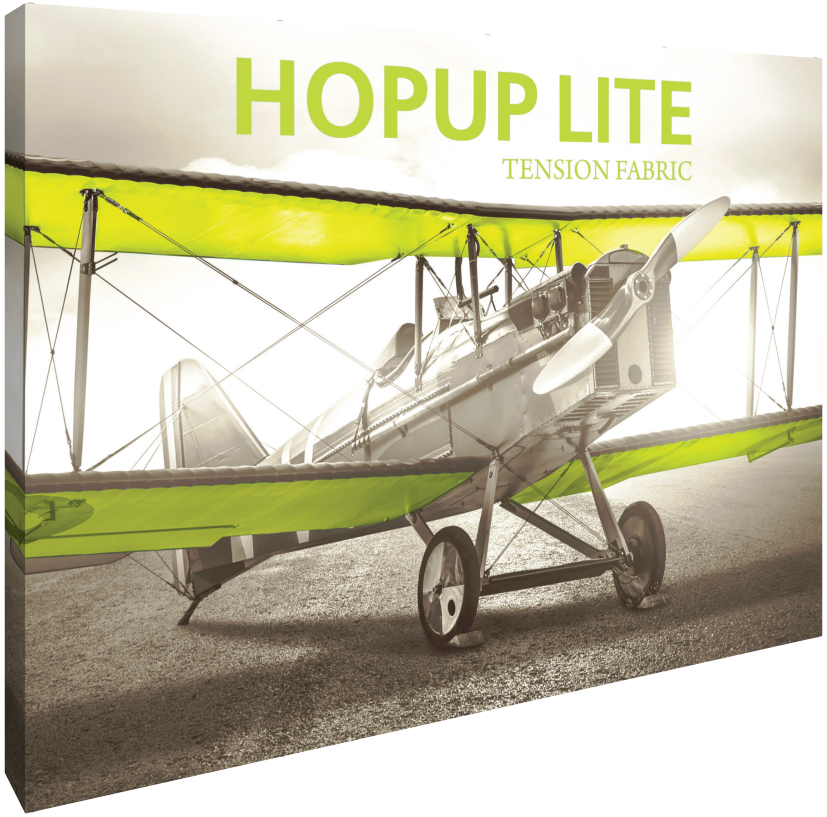

features and benefits:

- Light weight anodized silver frame with a smaller footprint
- Adjustable leveling feet
- Supports an integrated fabric graphic mural with or without end caps
- Kit includes one frame, one dye-sublimated graphic and one carry bag
- 1 year hardware warranty against manufacture defects

dimensions:

Hardware	Graphic
Assembled unit: **3x3:** 89”w x 89”h x 12”d 2261mm(w) x 2261mm(h) x 305mm(d) **4x3:** 118”w x 89”h x 12”d 2998mm(w) x 2261mm(h) x 305mm(d) Approximate weight: **3x3:** 21 lb / 10 kg **4x3:** 25 lb / 12 kg	Refer to related graphic template for more information. Graphic templates: info@expokiosque.com
Shipping	**additional information:**
3x3: Ships in 1 Carry Bag in a box: Box Size: 34”l x 9”h x 9”d 850mm(l) x 230mm(h) x 230mm(d) **4x3:** Ships in 1 Carry Bag in a box: Box Size: 34”l x 11”h x 9”d 850mm(l) x 270mm(h) x 230mm(d) Approximate shipping weight: **3x3:** 22 lb / 10 kg **4x3:** 26 lb / 12 kg	Graphic material: Dye-sublimation power stretch velcro fabric Adjustable leveling feet on all bottom hubs of the frames 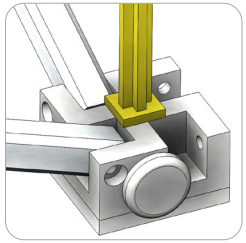

We are continually improving and modifying our product range and reserve the right to vary the specifications without prior notice. All dimensions and weights quoted are approximate and we accept no responsibility for variance. E&OE. See Graphic Templates for graphic bleed specifications.

Kit Assembly

Step by Step

Step 1.

Open the carry bag zipper. Carefully remove the frame with velcro webbing from the carry bag. The fabric graphic may also be attached to the velcro webbing. Stand the frame on the floor with the velcro webbing facing up.

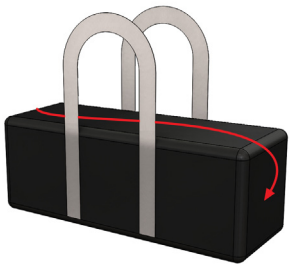

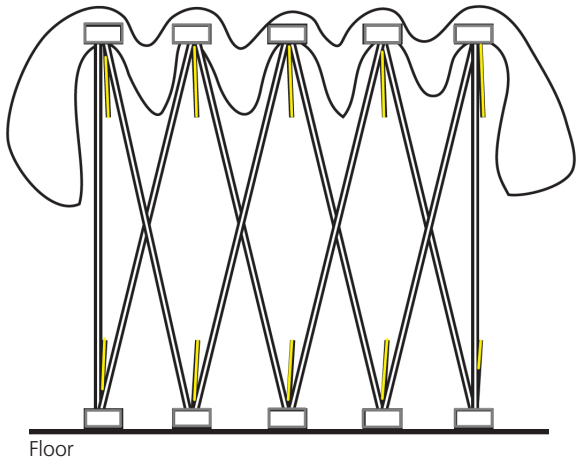

Step 2.

First, make sure the velcro webbing is not wrapped around the yellow locking arms. Next, go ahead and carefully pull the frame open. Leave the frame laid out on the floor with the velcro webbing facing up. Do not stand it up.

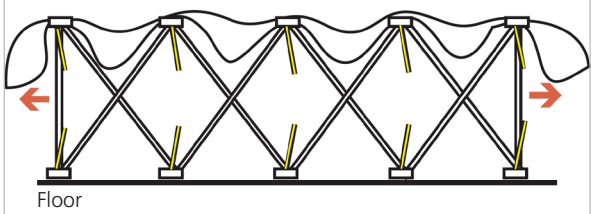

Step 3.

Snap all the yellow locking arms into place. Do not force them to lock.

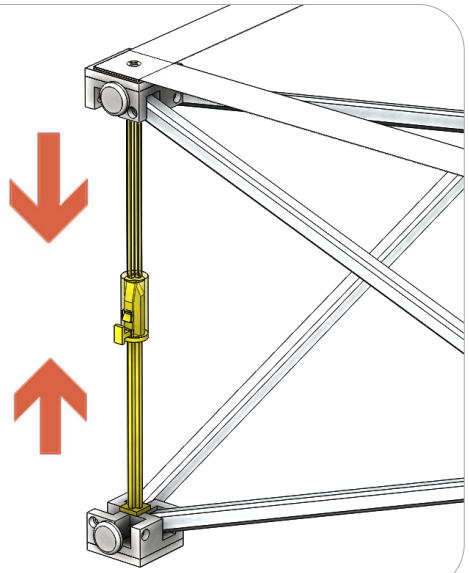

Step 4.

With the frame laid out on the floor, attach the fabric graphic on the velcro webbing. Use the numerical order shown in the image to the right. If the graphic is already velcro attached on the webbing, skip to numbers 5 and 6 for the end cap attachment.

Some velcro adjusting maybe necessary to eliminate the wrinkles.

Only use numerical order 1 through 4 for fabric graphics with out end caps.

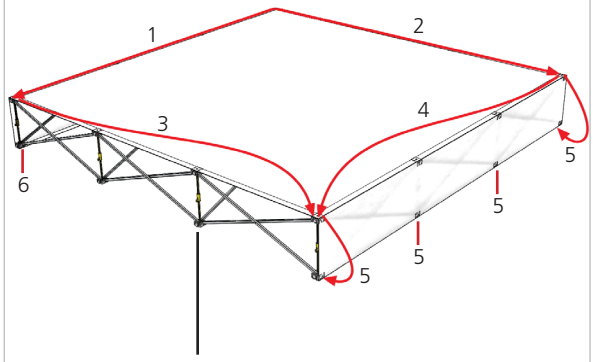

The hubs with adjustable leveling feet go to the floor and are the bottom end of the graphic artwork.

Kit Assembly

Step by Step

Step 5.

Carefully stand the unit up flat on the floor. Use the adjustable leveling feet to balance it on uneven floors.

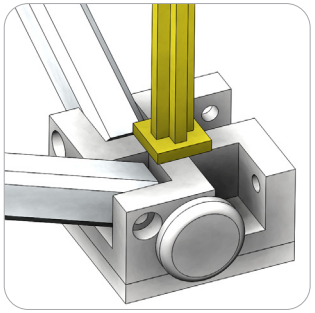

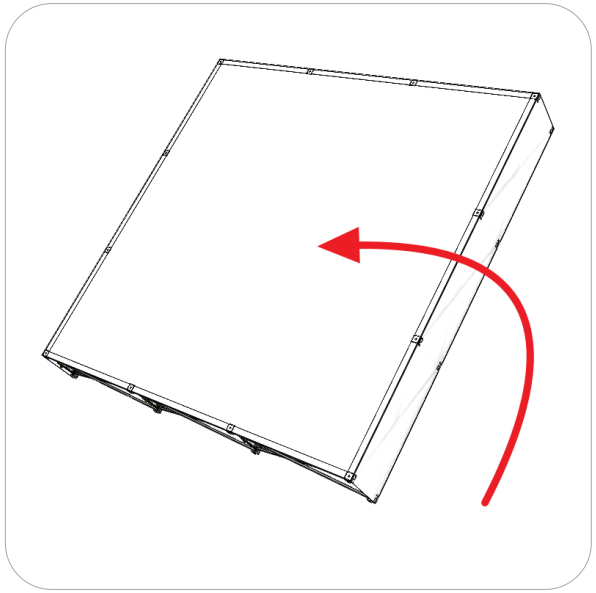

Step 6.

Setup is complete.

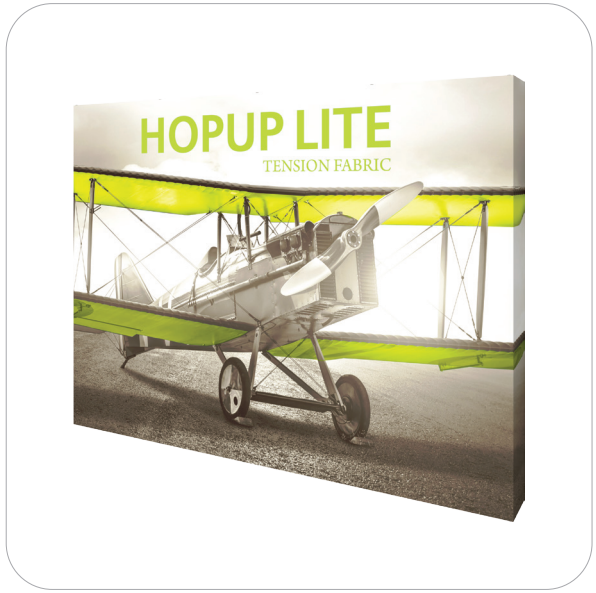

Dimensions

3x3:

3 quad wide units fit in a 10'x10' space.

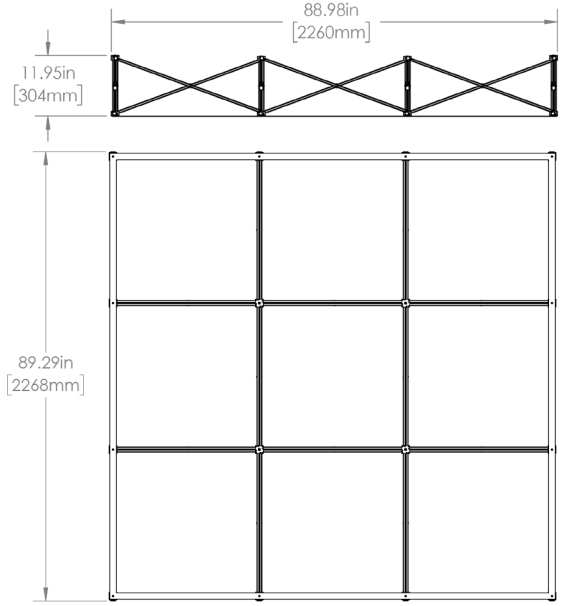

4x3:

4 quad wide units fit in a 10'x10' space.

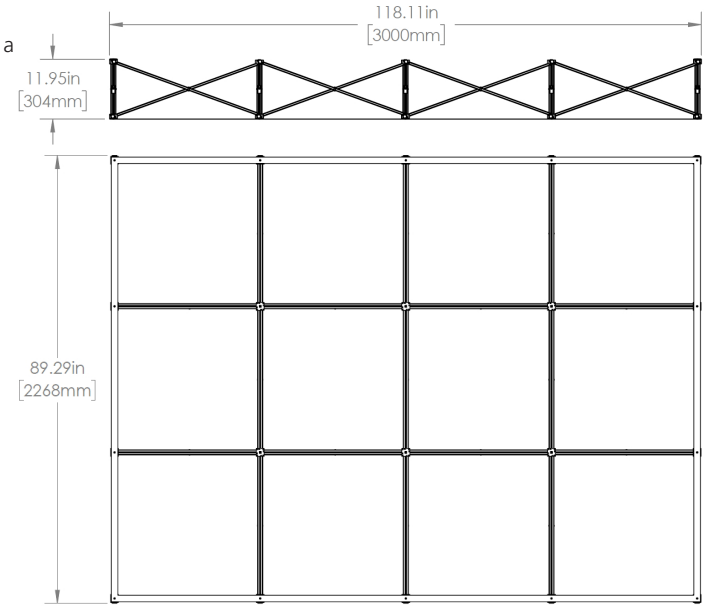

To ensure quality, please note:

If the webbing is wrapped around the yellow locking arm, the arm can snap off when extending the unit. Make sure that all yellow locking arms are clear from webbing and graphic before extending.

When setting up, ensure that the arms are aligned. If not, the arms will snap when pressure is applied. Use your hand to guide them together. They should not be forced into locking position.

When packing the unit in the bag, ensure that the bag straps or zipper are not partially wrapped around the yellow arm. Ensure that all arms are clear from being damaged.

Do not use the yellow locking arms to lift the frame. ALWAYS lift by the frame.

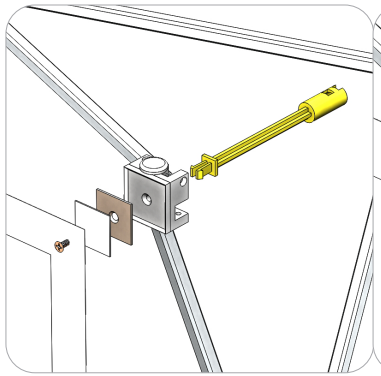

To detach the female arm, remove the screw, steel plate and velcro webbing. Pull the arm off the hub.

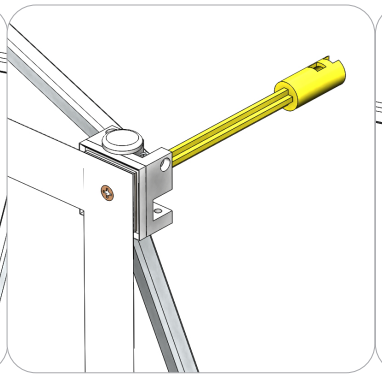

Attach the female arm by popping it into the hub. Fasten the screw through the steel plate hole and the velcro webbing tapping into the female arm.

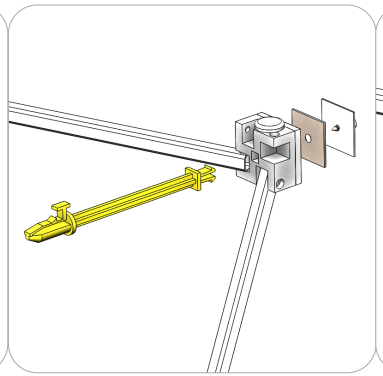

To detach the male arm, remove the screw, steel plate and velcro web-bing. Pull the arm off the hub.

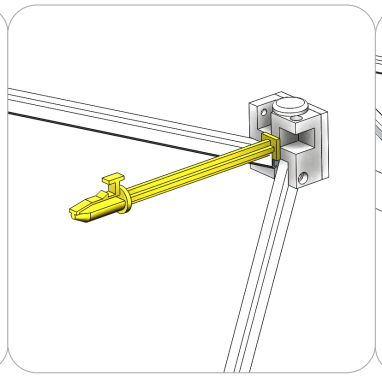

Attach the male arm by popping it into the hub. Fasten the screw through the steel plate hole and the velcro webbing tapping into the female arm.

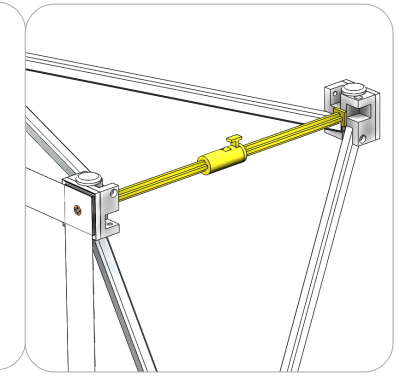

Both arms should align to snap lock together.