Formulate Essential Square Hanging Structures

ESS-SQU

Formulate™ Essential Square tension fabric hanging structures are available in numerous sizes. The economy aluminum tube frame features bungee cords for easy connections, hanging cables and a zippered pillowcase graphic. All sizes come with a carry bag and feature a one year limited hardware warranty.

Single sided graphic

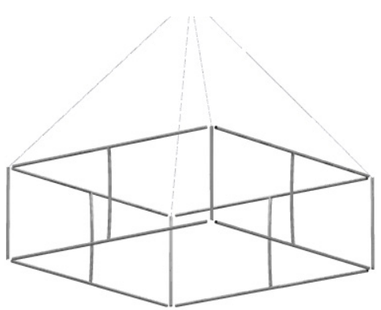

Frame

Double sided graphic

Graphic with printed bottom

We are continually improving and modifying our product range and reserve the right to vary the specifications without prior notice.
All dimensions and weights quoted are approximate and we accept no responsibility for variance. E&OE. See Graphic Templates for graphic bleed specifications.

features and benefits:

- Economy aluminum tube frame features bungee cords for easy connections
- Quick set up
- Graphics available double or single sided
- Kit Includes: one frame, pillowcase zipper fabric graphic (sold separately), hanging cables and carry bag
- One year limited hardware warranty against manufacturer defects

dimensions:

Hardware

Hardware can be found on page 2

Graphics

Graphic dimensions and templates are available on request: info@expokiosque.com

Graphic Material:
5 oz. Soft Knit Dye-sublimated zipper pillowcase fabric

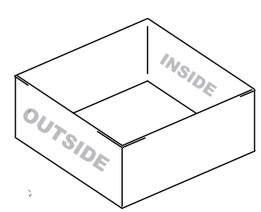

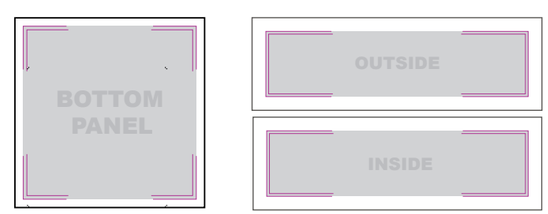

Shipping

Shipping dimensions:
0802: 54”l x 14”w x 9”h
1372mm(l) x 356mm(w) x 229mm(h)

0803: 54”l x 14”w x 9”h
1372mm(l) x 356mm(l) x 229mm(h)

0804: 54”l x 14”w x 9”h
1372mm(l) x 356mm(w) x 229mm(h)

1002: 65”l x 14”w x 9”h
1321mm(l) x 356mm(w) x 229mm(h)

1003: 65”l x 14”w x 9”h
1321mm(l) x 356mm(w) x 229mm(h)

1004: 65”l x 14”w x 9”h
1321mm(l) x 356mm(l) x 229mm(h)

1202: 52”l x 14”w x 12”h
1575mm(l) x 356mm(w) x 305mm(h)

1203: 52”l x 14”w x 12”h
1575mm(l) x 356mm(w) x 305mm(h)

1204: 52”l x 14”w x 12”h
1575mm(l) x 356mm(w) x 305mm(h)

Approximate shipping weight
(includes hardware and carry bag only):
0802: 29 lbs / 13.2 kgs
0803: 32 lbs / 14.5 kgs
0804: 35 lbs / 15.9 kgs
1002: 33 lbs / 15 kgs
1003: 36 lbs / 16.3 kgs
1004: 39 lbs / 17.7 kgs
1202: 39 lbs / 17.7 kgs
1203: 42 lbs / 19.1 kgs
1204: 45 lbs / 20.4 kgs

SQU-8' WIDTH				
HEIGHT	HARDWARE CODE	SINGLE-SIDED GRAPHIC CODE	DOUBLE-SIDED GRAPHIC CODE	BOTTOM ZIP-IN PANEL (PRINTED) CODE
2'	SQU-0802	SQU-0802-G	SQU-0802-GDBL	SQU-0802-GPBP
3'	SQU-0803	SQU-0803-G	SQU-0803-GDBL	SQU-0803-GPBP
4'	SQU-0804	SQU-0804-G	SQU-0804-GDBL	SQU-0804-GPBP

Single sided graphic

SQU-10' WIDTH				
HEIGHT	HARDWARE CODE	SINGLE-SIDED GRAPHIC CODE	DOUBLE-SIDED GRAPHIC CODE	BOTTOM ZIP-IN PANEL (PRINTED) CODE
2'	SQU-1002	SQU-1002-G	SQU-1002-GDBL	SQU-1002-GPBP
3'	SQU-1003	SQU-1003-G	SQU-1003-GDBL	SQU-1003-GPBP
4'	SQU-1004	SQU-1004-G	SQU-1004-GDBL	SQU-1004-GPBP

Double sided graphic

SQU-12' WIDTH				
HEIGHT	HARDWARE CODE	SINGLE-SIDED GRAPHIC CODE	DOUBLE-SIDED GRAPHIC CODE	BOTTOM ZIP-IN PANEL (PRINTED) CODE
2'	SQU-1202	SQU-1202-G	SQU-1202-GDBL	SQU-1202-GPBP
3'	SQU-1203	SQU-1203-G	SQU-1203-GDBL	SQU-1203-GPBP
4'	SQU-1204	SQU-1204-G	SQU-1204-GDBL	SQU-1204-GPBP

Printed zip-in bottom panel

***ALL GRAPHIC SIZES NOTED ARE FINISHED SIZES AND DO NOT INCLUDE REQUIRED BLEEDS. REFERENCE GRAPHIC TEMPLATES.**

SET UP INSTRUCTIONS:

STEP 1: TOP AND BOTTOM SHAPE ASSEMBLY

1. CONNECT BUNGEE TUBE AND MATCHING NUMBERS.

2. CONNECT OPEN ENDED TUBES BY MATCHING NUMBERS.

STEP 2: SPREADER ATTACHMENT

1. CONNECT BOTTOM OF SPREADER TO BOTTOM SHAPE STRUCTURE WITH PUSH BUTTONS BY MATCHING LETTERS

2. CONNECT TOP OF SPREADER TO TOP SHAPE STRUCTURE WITH PUSH BUTTONS BY MATCHING LETTERS

STEP 3: GRAPHIC ATTACHMENT

1. SLIDE PILLOWCASE GRAPHIC INTO FRAME.

2. ZIP GRAPHIC CLOSED.

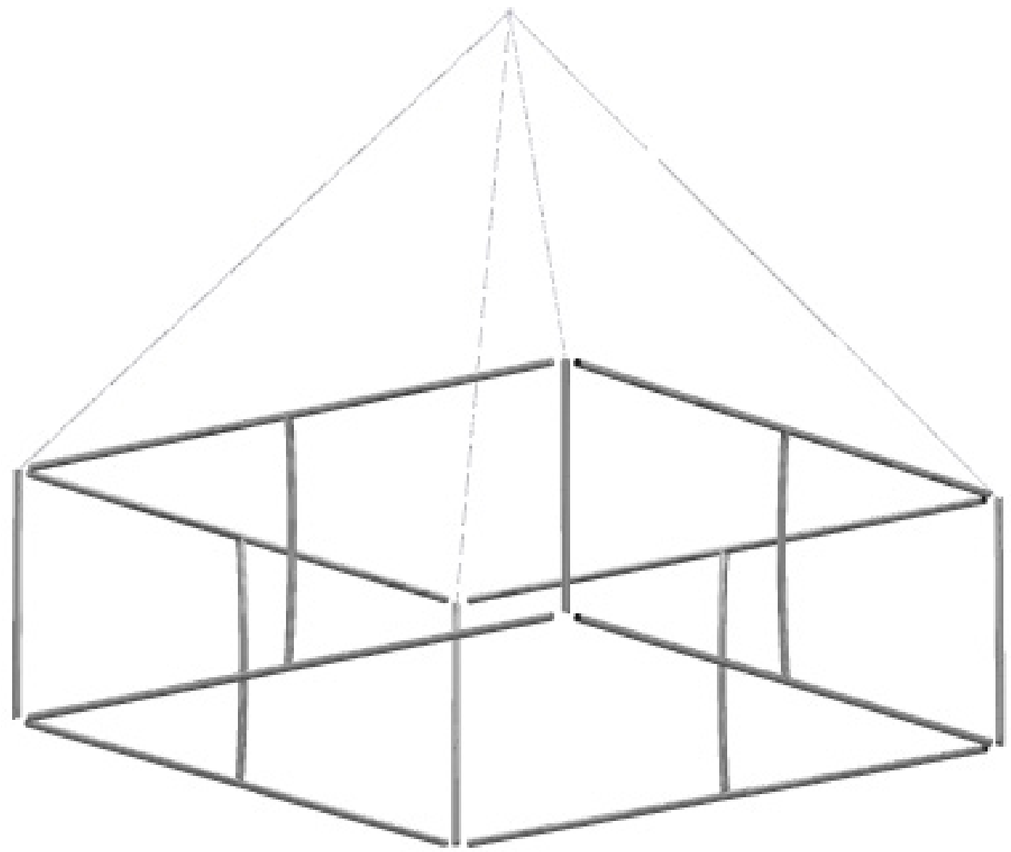

STEP 1

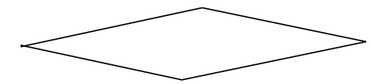

STEP 2

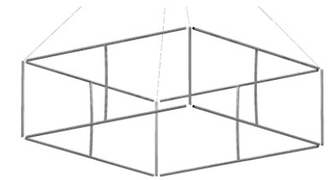
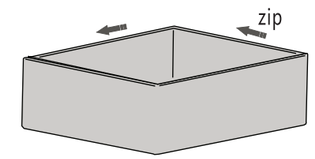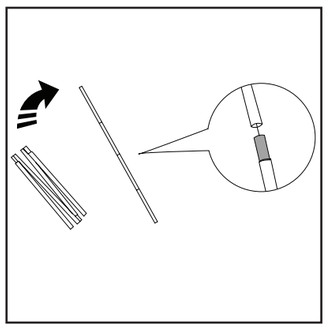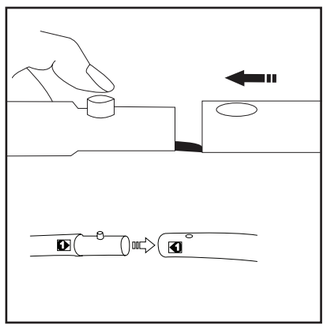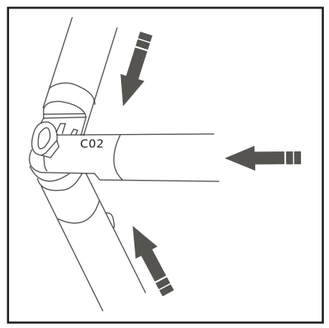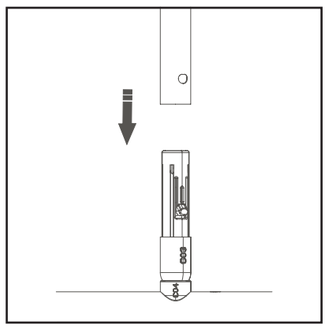
STEP 3